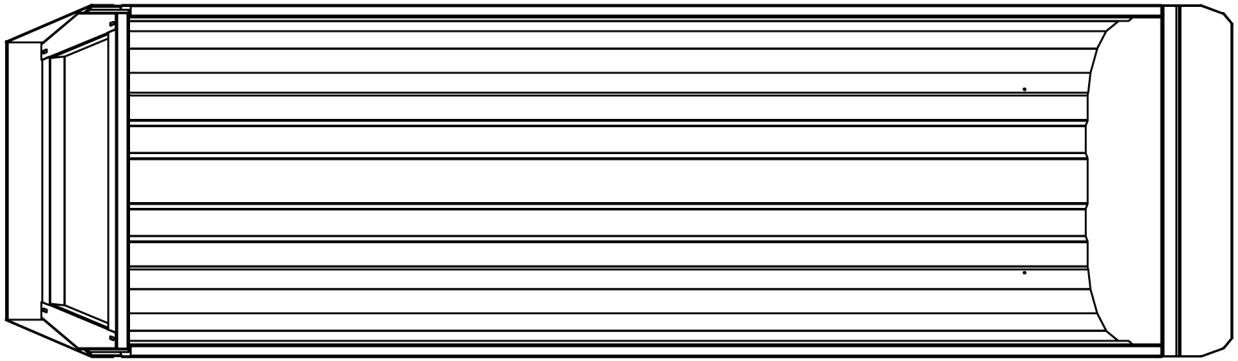

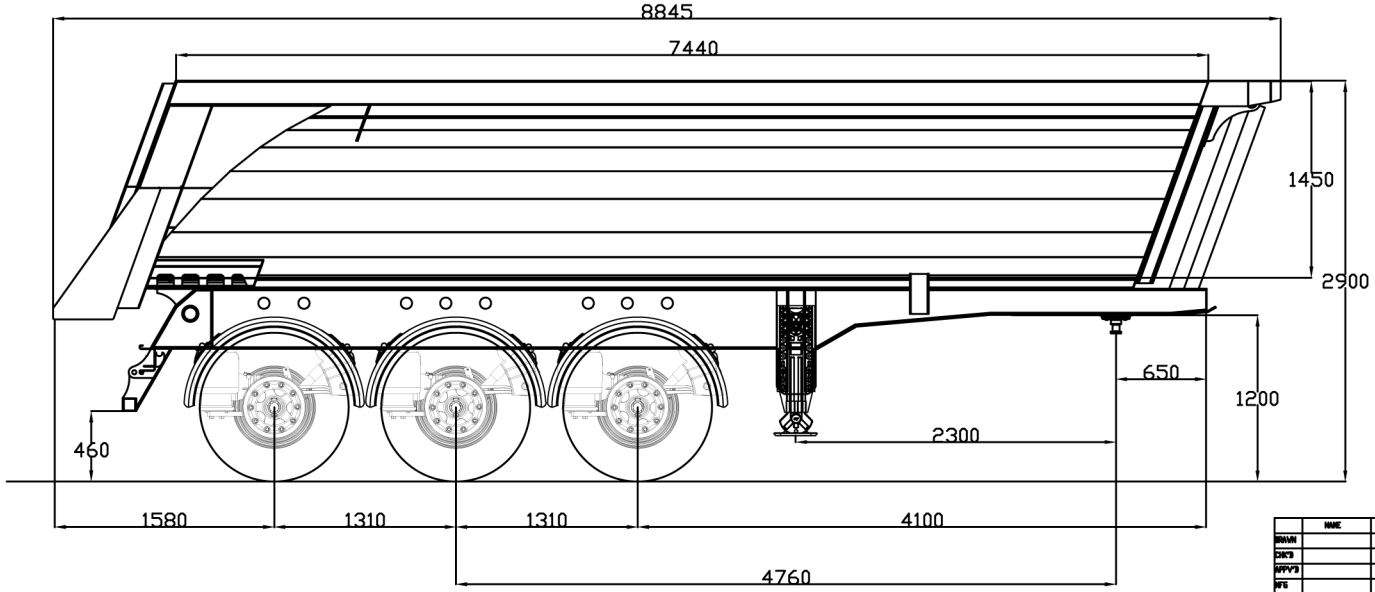

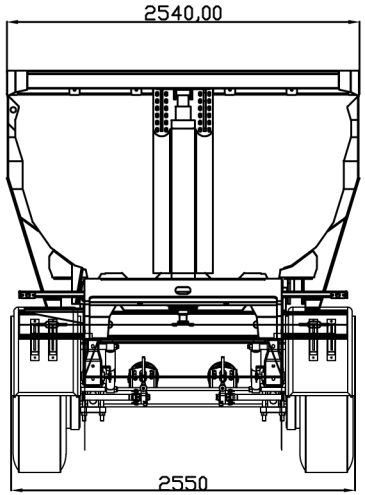

	NAME	SIGNATURE	DATE		
DRAWN				DRAWNER	
CHK'D				MECANICAL ENGINEER	
APPV'D				MECANICAL ENGINEER	
MFG					
Q.A				MATERIAL:	
				WEIGHT:	

TITLE:

ALURA TRAILER

www.aluratrailer.com

DWG NO: 24 m3 HAVUZ DAMPER

A4

SCALE:1:4

SHEET 1 OF 1