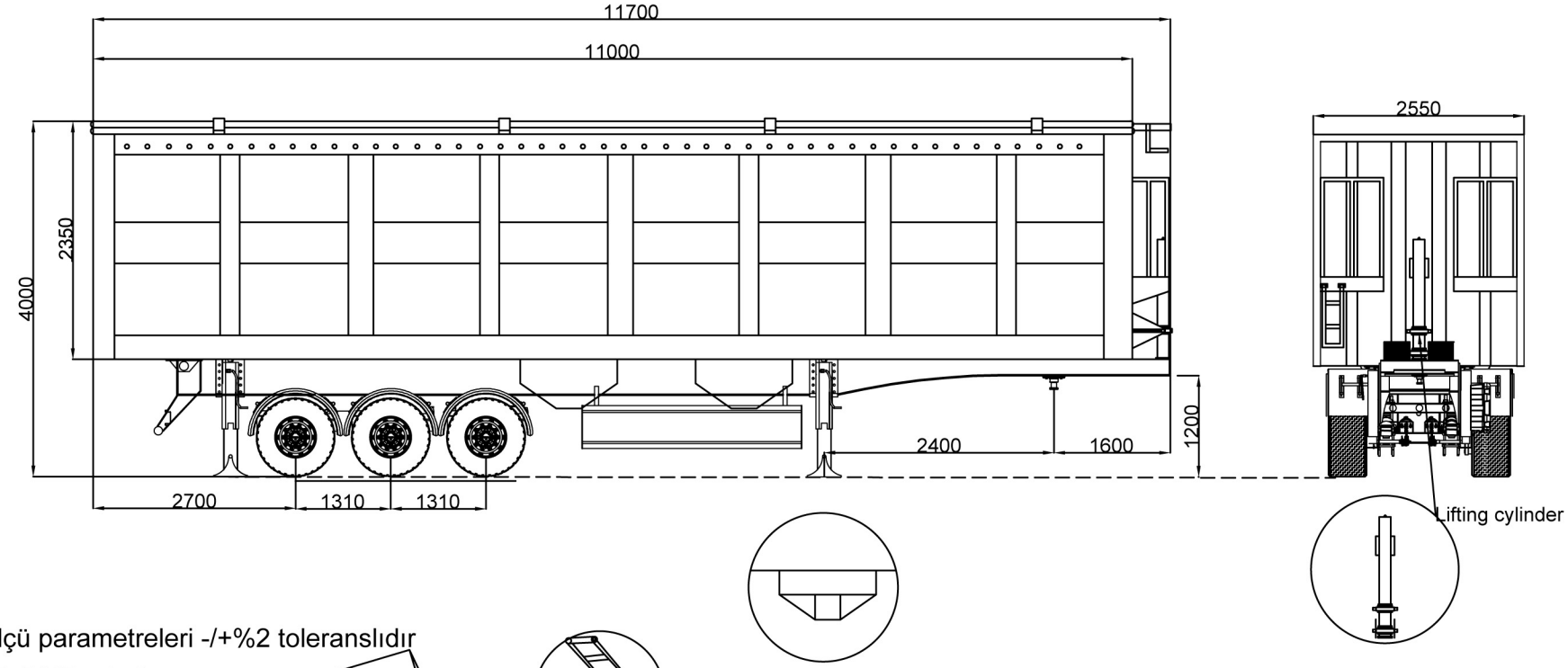

NOT : Ölçü parametreleri -/+%2 toleranslıdır

TIP : ALR-DMP - 078

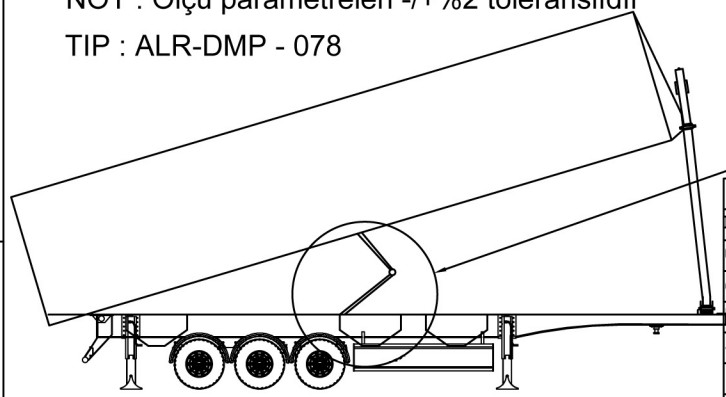

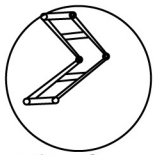

	NAME	SIGNATURE	DATE		
DRAWN	Mustafa Özesen				DRAWNER
CHK'D	Muharrem Akar				MECANICAL ENGINEER
APPV'D	Muharrem Akar				MECANICAL ENGINEER
MFG					
Q.A				MATERIAL:	
				WEIGHT:	

TITLE:

ALURA TRAILER

www.aluratrailer.com

DWG NO.

60 CBM - TIPPER for WHEAT TRANSPORT

A4

SCALE:1:1

SHEET 1 OF 1